# *"Advancing Power Electronics & Packaging Including AI/ML/DT Reliability Integration"*


## Prof. Doug Hopkins, ECE and Prof. Jong Ryu MAE

PREES Laboratory NC STATE UNIVERSITY
PACKAGING RESEARCH IN ELECTRONIC ENERGY SYSTEMS
Prof. Doug Hopkins, ECE, Director
Prof. Jong Ryu, MAE, Assoc Dir.

MIND Multiphysics Multiscale Intelligent Design
Prof Jong Ryu, MAE Director




jryu@ncsu.edu


©2025 douglas c hopkins


dchopkins@ncsu.edu

PREES Laboratory
NC STATE UNIVERSITY
PACKAGING RESEARCH IN ELECTRONIC ENERGY SYSTEMS
Prof. Doug Hopkins, ECE, Director
Prof. Jong Ryu, MAE, Assoc Dir.

# "Universal Stacked Die Layout Technique for Minimizing Parasitic Inductance in Flying-Cap Multilevel Converters"

A **universal** layout technique using 3D Stacked Die packages to **reduce power loop inductance up to 95%**, in Flying-Cap-Based multilevel (3,5,7,…) converters, significantly improving performance.

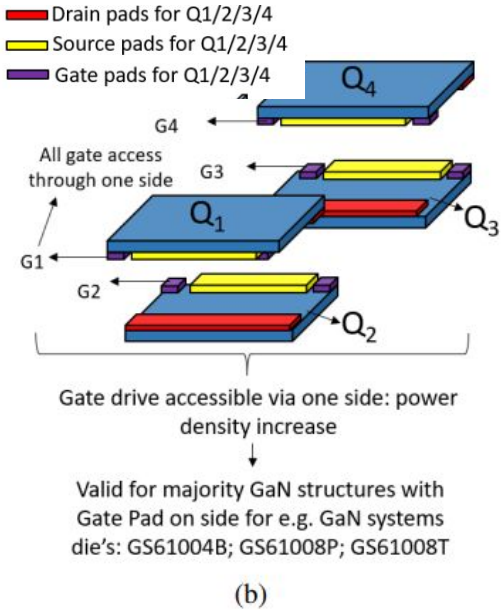


(b)

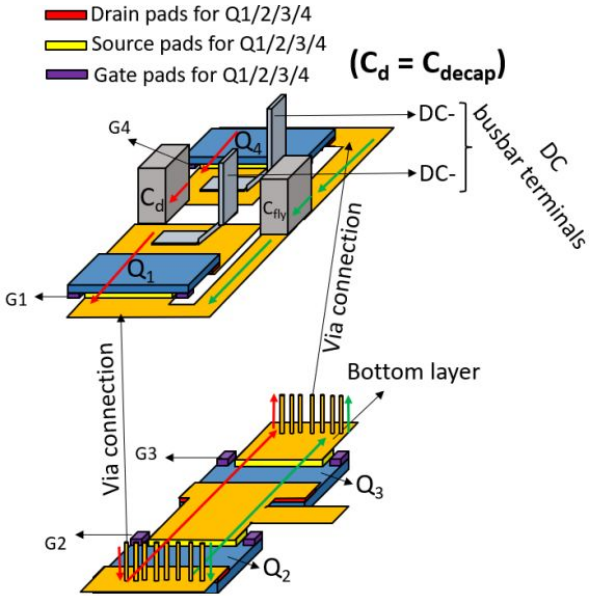


(a)

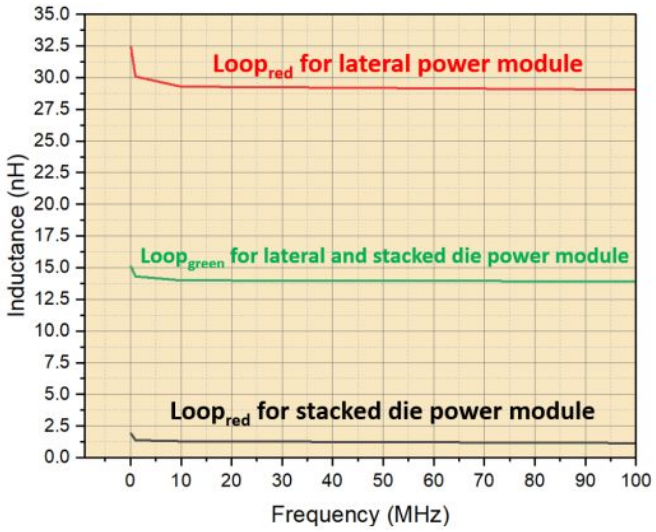

# *Research in Power Electronics & Packaging*

PREES Laboratory
NC STATE UNIVERSITY
PACKAGING RESEARCH IN ELECTRONIC ENERGY SYSTEMS
Prof. Doug Hopkins, ECE, Director
Prof. Jong Ryu, MAE, Assoc Dir.

## "Novel Integrated Ferromagnetic-Conductor (IFC) Multilayered Shield Layer for Parasitic Reduction in Power Modules"

A Power Module **Integrated *Ferromagnetic* Conductor (IFC)-based multilayer shields** is superior to traditional Cu conductor shields to effectively reduces parasitic loop inductance and provides better near-field emissions protection. A 0.3 oz Ni plated on Cu reduced $L_{Loop}$ by 2%, 6.8%, and 4.3% for substrate dielectric thicknesses of 40, 120, and 300 µm, vs only Cu shield.

Near Field Emission Suppression

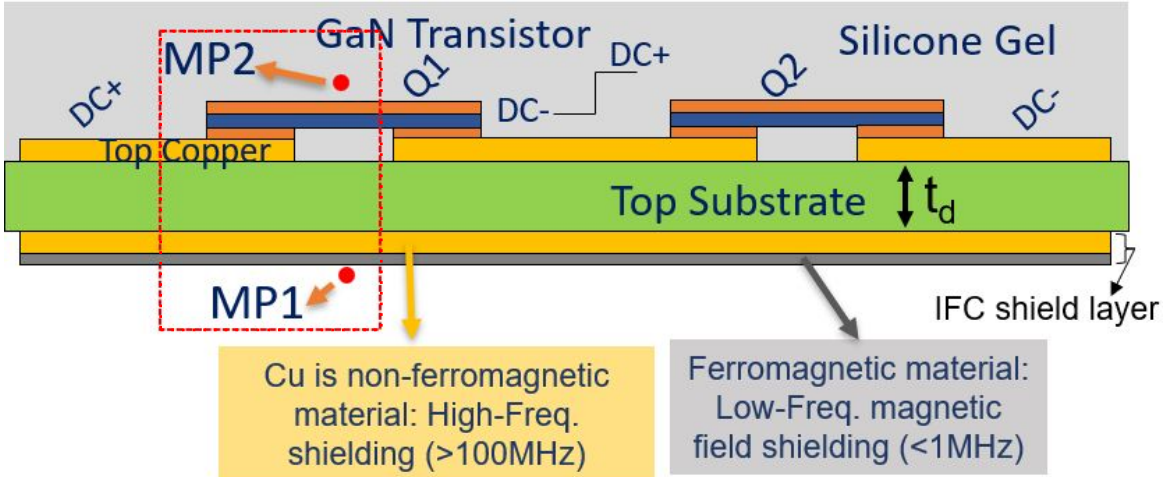

# *Research in Power Electronics & Packaging*

PREES Laboratory
NC STATE UNIVERSITY
PACKAGING RESEARCH IN ELECTRONIC ENERGY SYSTEMS
Prof. Doug Hopkins, ECE, Director
Prof. Jong Ryu, MAE, Assoc Dir.

## "AI-Based Optimization of Co-Designed Stacked Metallized Substrate Module Structures"

This technique **mitigates E-field intensities in stacked substrates to enhance the PD performance** of SiC power modules. A co-design framework incorporates electric and thermomechanical effects. A non-dominated sorting genetic algorithm (NSGA) explores trade-offs in PD mitigation and die-attach fatigue life under power cycling. **Optimization results indicate a 67.5% reduction in E- field intensity** vs conventional 10 kV designs.

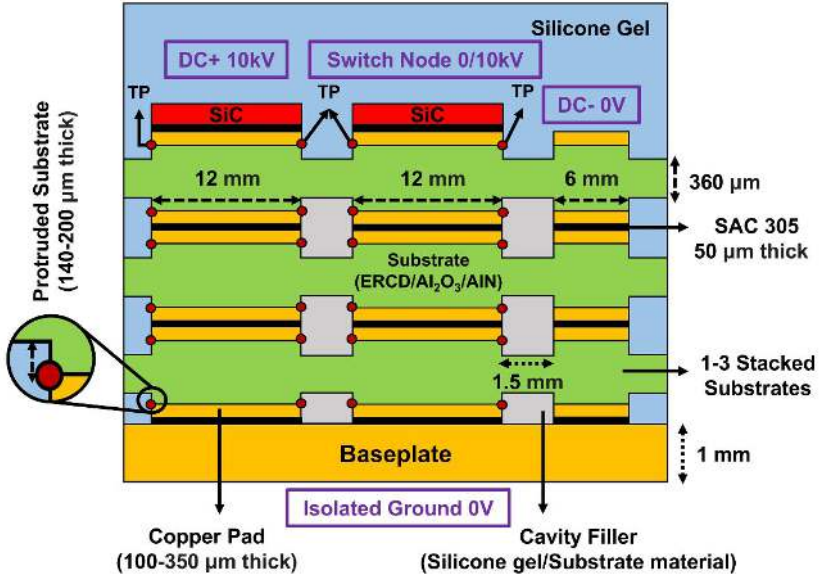


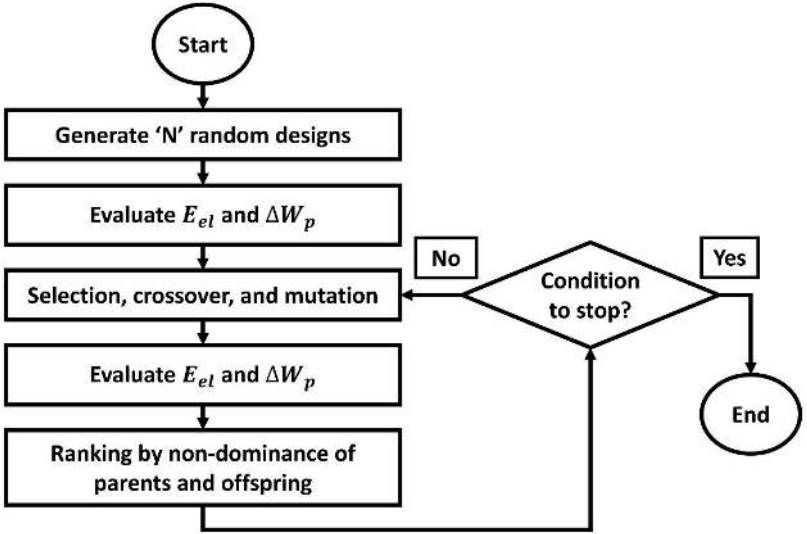

# *Research in Power Electronics & Packaging*

PREES Laboratory
NC STATE UNIVERSITY
PACKAGING RESEARCH IN ELECTRONIC ENERGY SYSTEMS
Prof. Doug Hopkins, ECE, Director
Prof. Jong Ryu, MAE, Assoc Dir.

## Package-Related Degradation Simulation in a SiC JFET/Si MOSFET Cascode under Power Cycling Test

OBJECTIVE: Package-related degradation characterization of a SiC JFET/Si MOSFET cascode structure through:
1. Multiscale physics-based FEA models to capture component degradation and package-level stressors.
2. Performing a **Pseudo-power Cycling Test (PPCT)** to tune and validate the FEA models.
3. Develop Digital Twins for predicting Remaining Useful Life (RUL).

Pseudo-PCT setup

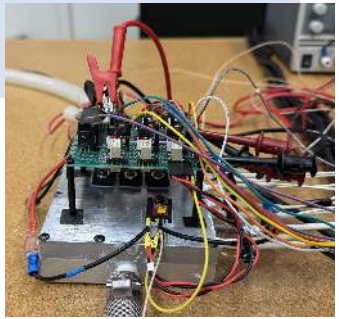

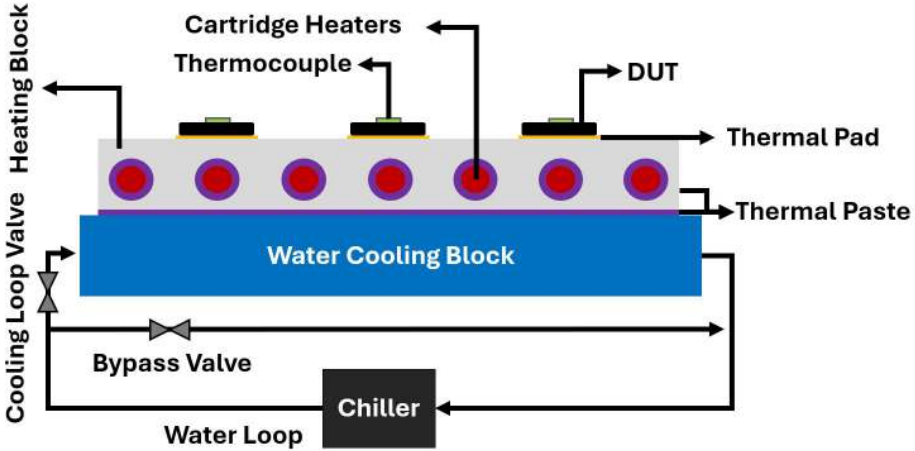


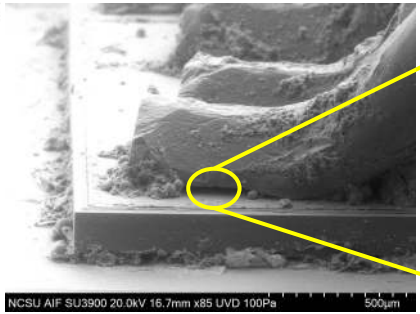


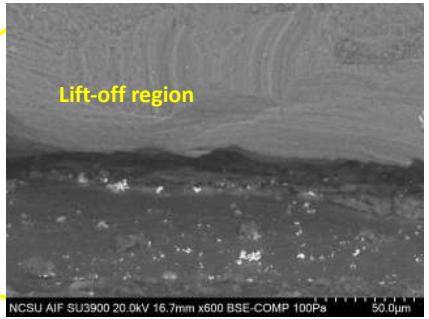

# *Research in Power Electronics & Packaging*

PREES Laboratory
NC STATE UNIVERSITY
PACKAGING RESEARCH IN ELECTRONIC ENERGY SYSTEMS
Prof. Doug Hopkins, ECE, Director
Prof. Jong Ryu, MAE, Assoc Dir.

## "Co-Design and ML-Based Optimization of Through-Via in Silicon and Glass Interposers for Electronic Packaging Applications,"

Investigates multiphysics effects of aspect ratio (AR) and pitch (P) in square and hexagonal Cu via arrays in Through Via Glass (TVG) & Si (TVS). Cu protrusion, thermal resistance, and electrical parasitics are optimized. An online artificial neural network (ANN) algorithm, as well as the conventional genetic algorithm (GA), are compared.

1. Developing a multi-objective optimization framework incorporating online artificial neural network (ANN).

2. Comparison of online ANN-based optimization and conventional Genetic algorithm (GA)

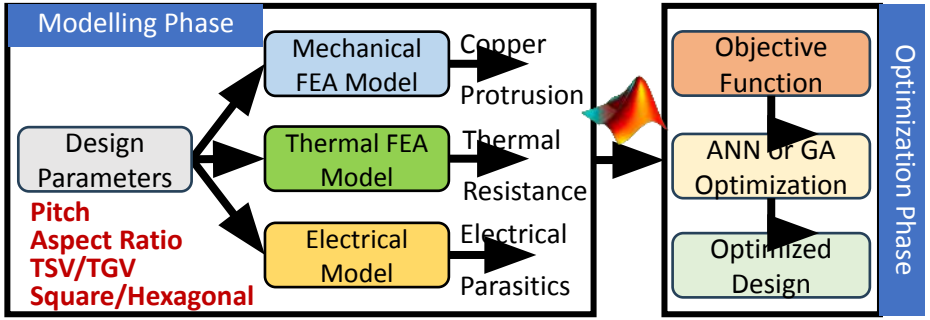


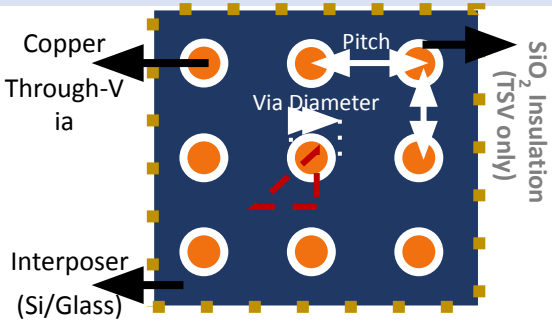


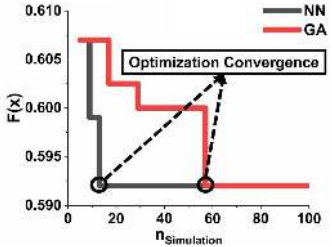


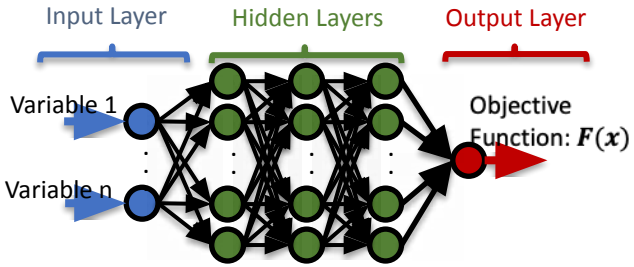

# *Digital Twin for Prognostics and Health Management*

PREES Laboratory
NC STATE UNIVERSITY
PACKAGING RESEARCH IN ELECTRONIC ENERGY SYSTEMS
Prof. Doug Hopkins, ECE, Director
Prof. Jong Ryu, MAE, Assoc Dir.

**Impacts**

- **EV:** PHM enables risk-aware, condition-based maintenance of EV power electronics, improving safety, reliability, and lifecycle cost efficiency.
- **Energy grid:** Early warning and uncertainty-aware failure prediction for grid assets, enhancing resilience, preventing cascading outages, and supporting reliable integration of renewable energy.

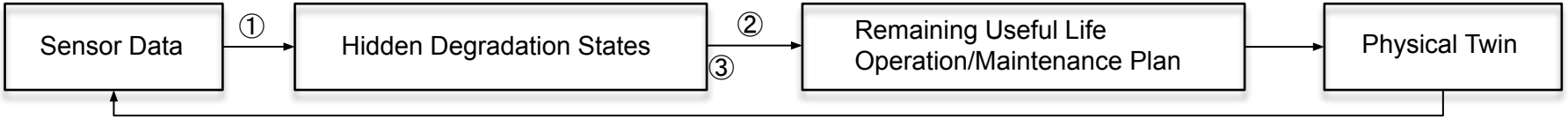


| | Description | Model training | Data | Example |
|---|---|---|---|---|
| ① | | | Multiphysics simulation | $R_{DSon}$ vs. wire, solder cracking |
| ② | UQ of Remanning Useful Life | | Physics-of-failure, Experiment | Crack growth ~ (temperature, stress, dwelling time) |
| ③ | | | Physics-of-failure | Crack growth per cycle |

# Digital Twin for PHM of SiC Device

*Prognostics and Health Management*

PREES Laboratory
NC STATE UNIVERSITY
PACKAGING RESEARCH IN ELECTRONIC ENERGY SYSTEMS
Prof. Doug Hopkins, ECE, Director
Prof. Jong Ryu, MAE, Assoc Dir.

## Observable and Hidden Data – COMSOL / Analytical

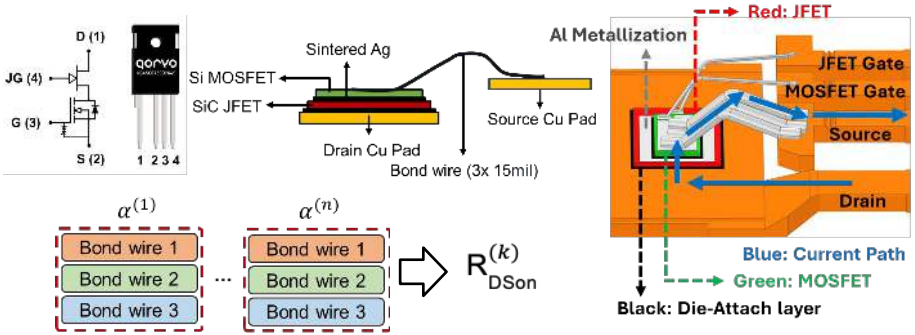


## Degradation trajectory and Life – Mech. Sim., Experiment

e.g., stress in bond-wire pad

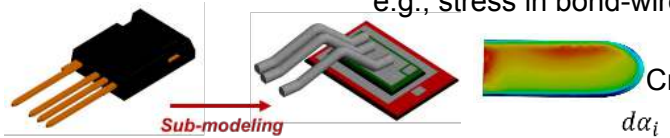


*BCs. are imported from full-model simulation*



Crack growth model

$$\frac{d\alpha_i}{dN} = a\left(\Delta\varepsilon_{p,i}\right)^b, a, b: const.$$

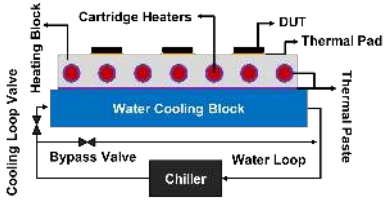


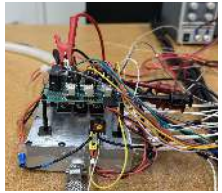

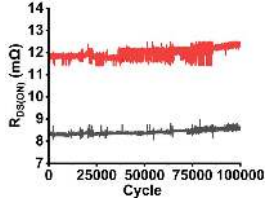


## Filtering predictions

Accuracy increases every monitoring cycle.

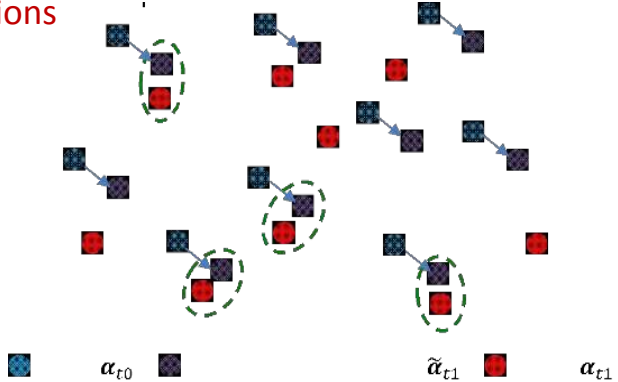


## Scalability and Extensibility **(Future Work)**

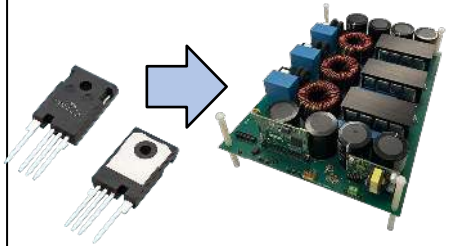

**Failure physics**

- Thermal stress (current)
- Insulation degradation
- Capacitor degradation
- Single-event hazard function

# *Research in Power Electronics & Packaging*

## "Semiconductor Electronics Mfgr Program – EPack-LAB"

PREES Laboratory NC STATE UNIVERSITY
PACKAGING RESEARCH IN ELECTRONIC ENERGY SYSTEMS
Prof. Doug Hopkins, ECE, Director
Prof. Jong Ryu, MAE, Assoc Dir.

The "Electronic Packaging Lab in A Box" Program offers (1) curriculum for 2Yr & 4Yr schools to develop Community College Teachers, (2) a Deployable Hands-On Laboratory "BOX" (processing chips into products, and (3) leveraging AR/VR in a Master Trainer Multiplication Model to accelerate teacher development. Students use AR/VR for homework, projects and upskilling before and after they graduate.

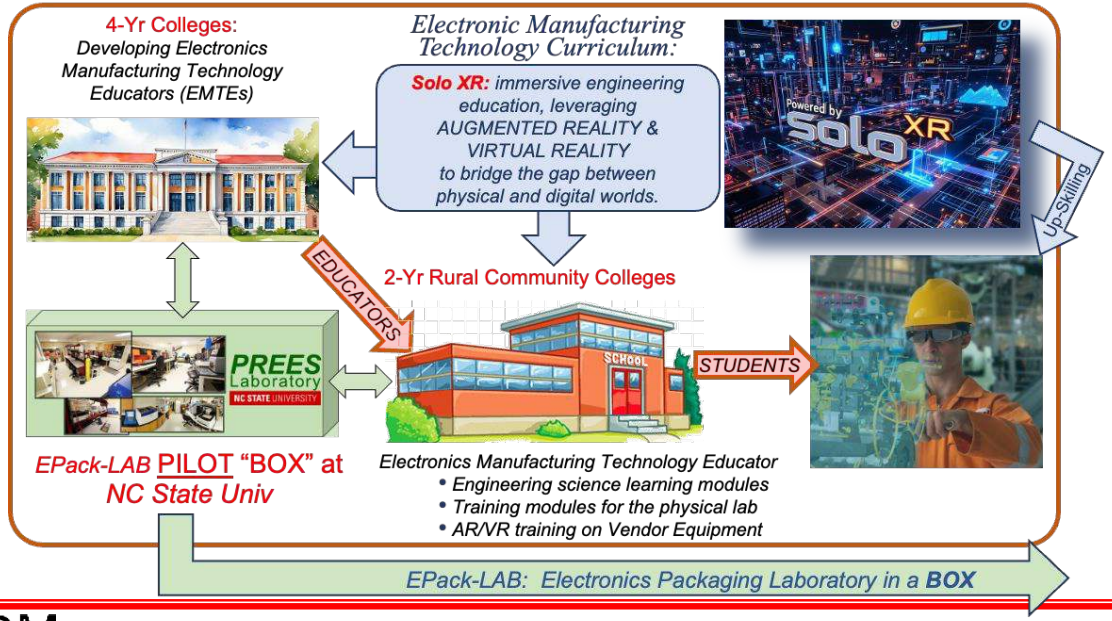


See Poster:
Sign Up To Make
A Difference

Laboratory for Packaging Research in Electronic Energy Systems (PREES)

FREEDM Systems Center, North Carolina State University

1791 Varsity Drive, Suite 100; Raleigh, NC 27606-7571
Tele: 919-513-5929, Fax: 919-513-0405